DIMNS MARKED DENOTES (S) SAFETY/REGULATION (F) CRITICAL FIT/FUNCTION (M) MAJOR FIT/FUNCTION (M2) MINOR FIT/FUNCTION

FINISH GRINDING PISTON ROD DIAMETER "A"	HARD CHROMIUM PLATING THICKNESS (BEFORE POST CHROME GRINDING)	HARD CHROMIUM PLATING THICKNESS (AFTER POST CHROME GRINDING)	AFTER POST CHROME GRINDING PISTON ROD DIAMETER "A"
(F) Ø12.399~12.409	(M2) 18±4 MICRONS	(M2) 15±4 MICRONS	(F) Ø12.424~12.444

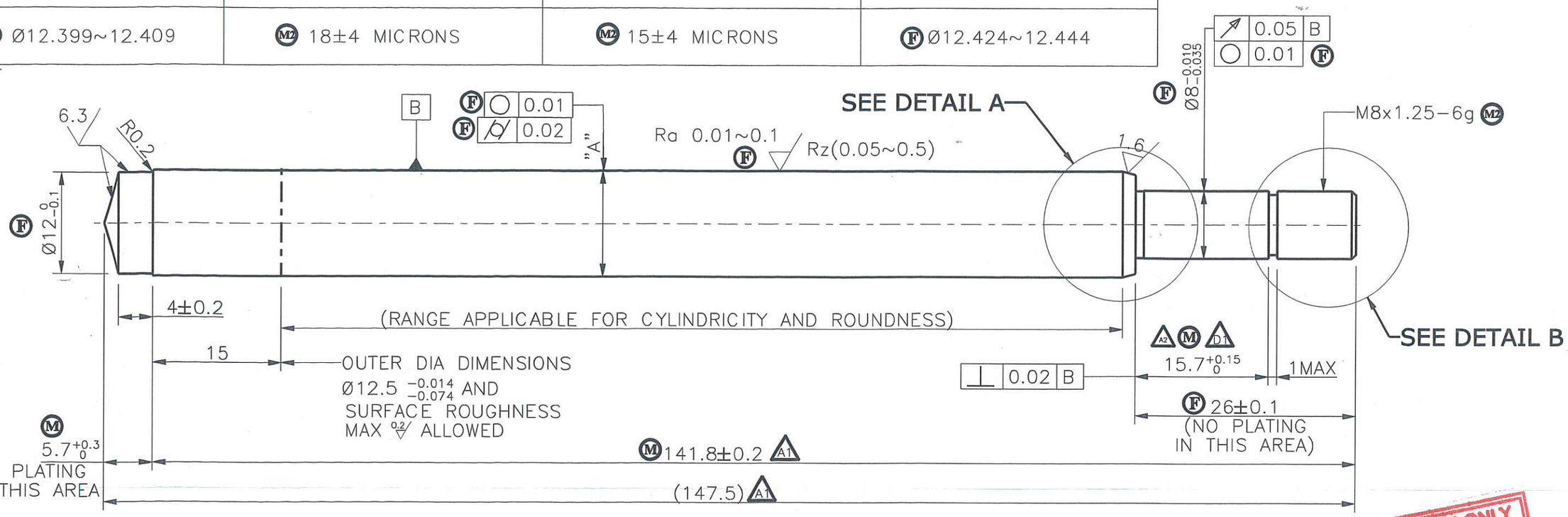

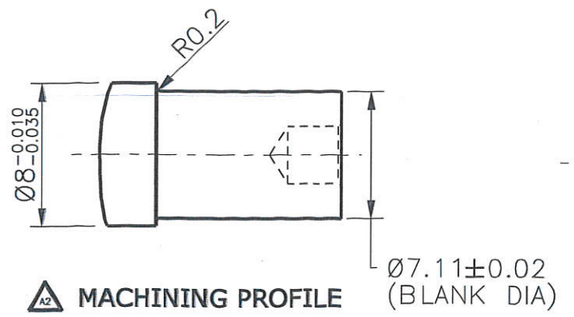

(A2) MACHINING PROFILE

DETAIL B(3:1)

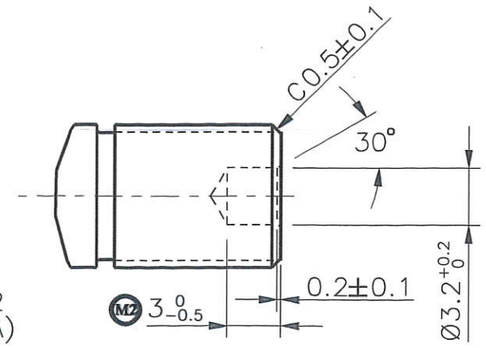

DETAIL B(3:1)

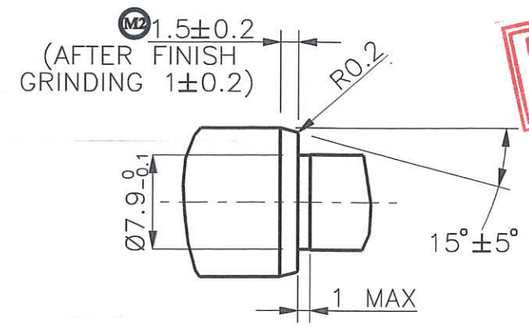

DETAIL A(2:1)

FOR PROTOTYPE ONLY
QTY : 50 NOS.
REQUESTED BY: Capt

NOTE:
1. TO BE GROUND TO FINISH SIZE AFTER PLATING, MATERIAL REMOVAL 3 ~ 5 μ ON DIAMETER.
2. MUST BE NO CHATTER, SCRATCH, ABRASION AND BRUISE ON SURFACE OF Ø12.5.
3. MUST BE NO PIN HOLE, ROUGH SURFACE AND BLISTER AFTER PLATING.
(A1) 4. CHROME HARDNESS : HV800MIN/50gms LOAD.
5. PARTING PIP NOT PERMITTED.
6. CORROSION RESISTANCE : CASS TEST 1 CYCLE (16Hrs SPRAY AND 8Hrs NO SPRAY) RATING NO : 8 MIN.
6.a. PLATING VALIDATION : CORROSION RESISTANCE AS MENTIONED, OTHER PARAMETERS AS PER GSP 0103.
7. THE QUALITY STANDARD OF RAW MATERIAL FOR PISTON ROD AS PER GP 136-5 / REV.C (PART NO : G080022)

DATE	REV	ALTERATION	E.C.N.NO
08.02.19	A2	RELEASED FOR PROTOTYPE.	---
22.11.17	00	RELEASED FOR MASS PRODUCTION.	419-02
12.05.17	A1	DIM. 141.8 WAS 140.8,147.5 WAS 146.5. HARDNES CHECKING LOAD 50g WAS 25g.	D52/17
28.10.16	D2	LENGTH 140.8 WAS 139.6	D113/16
30.05.16	D1	DIM 145.3,26,16.3 WERE 144.3,25,15.3	D52/16
14.01.16	D0	RELEASED FOR PROTO TYPE	

SUPERSEDES :

GENERAL TOLERANCE ASPER : –

DESIGN SOURCE REF.

RELEASE FOR
☐ COSTING ■ PROTOTYPE ☐ OTS ☐ PRE-PRODUCTION ☐ PRODUCTION

GABRIEL INDIA LTD.

SCALE	SHEETS	FINISH:	MASS:
2:1	1 / 1	REFER TABLE	124.6 g

DRAWN BY GANESH PATIL Capt
DATE: 08.02.19
CHECKED BY for BALAJI D Capt
DATE: 08.02.19
APPROVED BY DIWAKAR BHAT Bhat
DATE: 08.02.19

NAME:– PISTON ROD

MATERIAL:– SAE 1035 GP136-5 REV.C

PART NO:– 64040165 REV. A2

ALL DIMENSIONS ARE IN MM. | NO MANUAL ALTERATION | DO NOT SCALE | IF IN DOUBT PLEASE ASK | SIZE : A3

BK71(03FA)

CONFIDENTIAL: THIS DRAWING AND THE INFORMATION THEREIN ARE THE PROPERTY OF GABRIEL INDIA LTD., AND SHALL NOT BE REPRODUCED, COPIED RECORDED IN ANY MEDIA, USED FOR ANY OTHER PURPOSE OR DELIVERED AND/OR DISCLOSED TO ANY THIRD PARTY WITHOUT WRITTEN CONSENT OF GABRIEL.